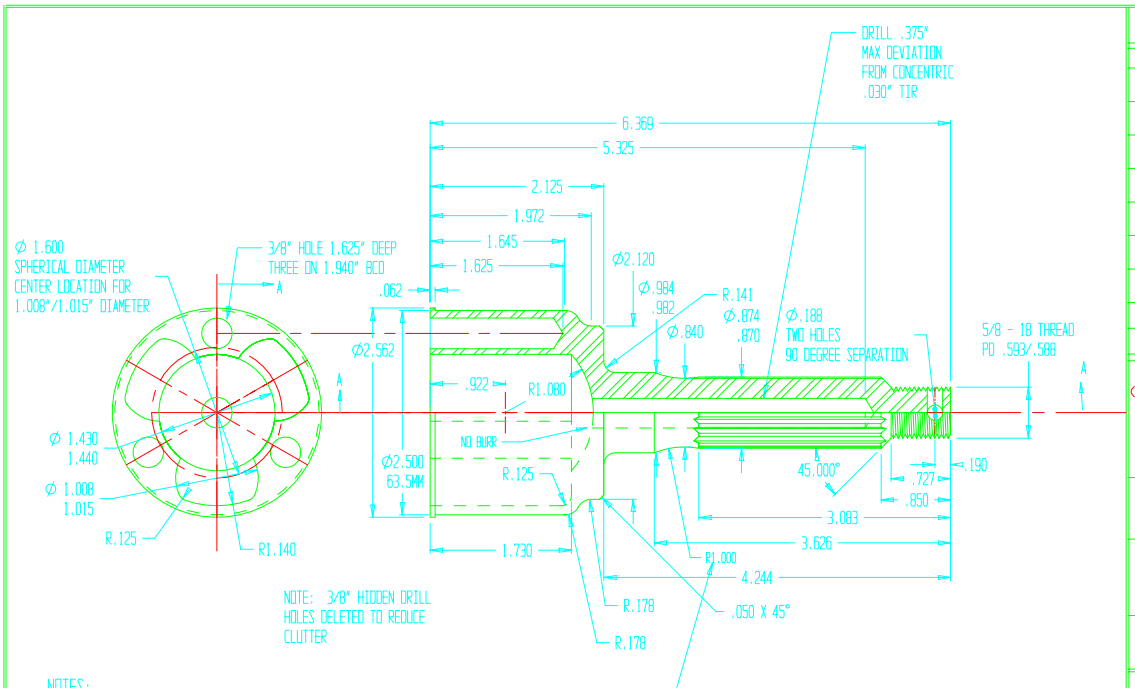

NOTES:
1. PART TO BE CLEAN AND BURR FREE
2. BREAK ALL CORNERS, INSIDE AND OUT .010
3. NO SCUFFS OR ABRASIONS
4. SURFACE FINISH TO BE RA 32 OR BETTER
   UNLESS OTHERWISE NOTED
5 ANNEAL THREADS +1/2" 35-42 RC

SPLINE DETAIL
20 TEETH
24/48 PITCH
45 DEGREE PRESSURE ANGLE
.966"/.964" OVER .080" PINS
SAME AS 679 BB

DATE	LEV.	REVISION	E.C.N.	DR.	CK.
9/14/06	A	RELEASE FOR QUOTATION		CT	
9/14/06		NOTES ADDED		CT	
9/14/06		ADDED LENGTH OF THREAD @ 45 DEGREE		CT	

TOLERANCES
(UNLESS SPECIFIED)
DECIMAL
.00= +/- .02
.000= +/- .005
.0000= +/- /.0005
ANGLES = +/- 1 DEG

DRAWN: CT
SCALE: N.A.
DATE: 9/14/06
CHECKED:

ALL INFORMATION CONTAINED IN THIS DOCUMENT IS THE SOLE PROPRETY OF AND PROPRIETARY TO TAYLOR RACE ENGINEERING, INC AND IS NOT TO BE USED WITHOUT WRITTEN PERMISSION OF TRE, INC. PRIOR TO IT'S USE

MATERIAL: AISI C-4340
MAT'L CODE:

HEAT TREAT: Rc 48-50
FINISH: BLACK OXIDE

TAYLOR RACE ENGINEERING
2010 AVENUE G UNIT 914
PLANO TEXAS 75075
PHONE 972-422-0567
FAX 972-422-8677

NAME: STUB AXLE TULIP
POLARIS STYLE

PART NO.: INV-02004132