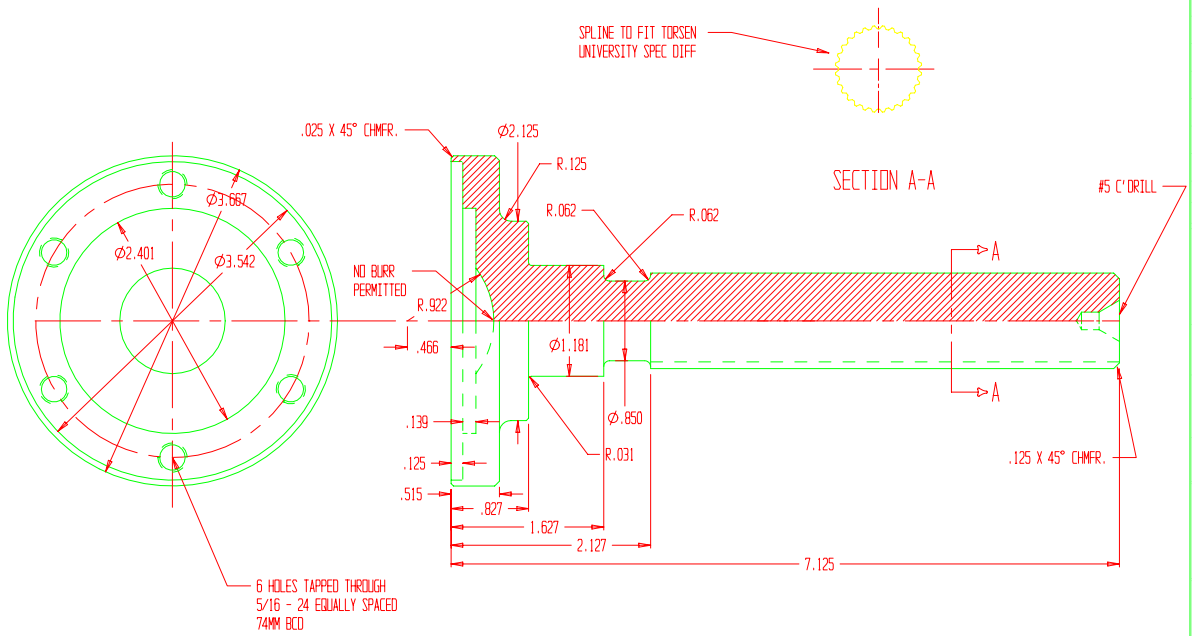

DATE	LEV.	REVISION	E.C.N.	DR.	CK.

ALLOWABLE TOLERANCES
(UNLESS SPECIFIED)
DECIMAL
.00= +/- .02
.000= +/- .005
.0000= +/- /.0005
ANGLES = +/- 1 DEG.

DRAWN: K.J.T.
SCALE: N.A.
DATE: 12/08/02
CHECKED:

ALL INFORMATION CONTAINED IN THIS DOCUMENT IS THE SOLE PROPRETY OF AND PROPRIETARY TO TAGGART PERFORMANCE ENGINEERING, INC. AND IS NOT TO BE USED WITHOUT WRITTEN PERMISSION OF TPE, INC. PRIOR TO IT'S USE

MATERIAL: AISI C-4340
MAT'L CODE:

HEAT TREAT: N.A.
FINISH: N.A.

TAYLOR RACE ENGINEERING
2010 AVENEUE G UNIT 914
PLANO TX 75074
PHONE 972-422-0567
FAX 972-422-8677

NAME: STUB AXLE SAE TORSEN
86 MM TRIPOD

PART NO.: 0200418